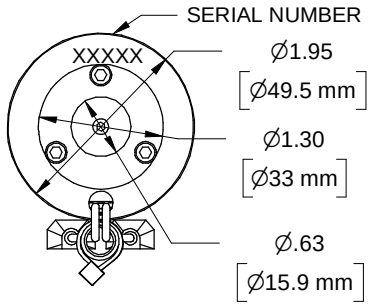

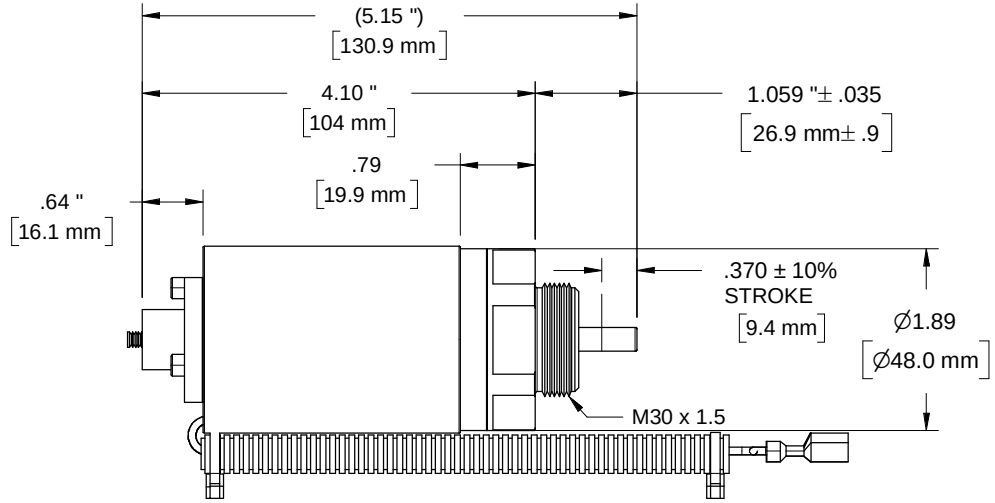

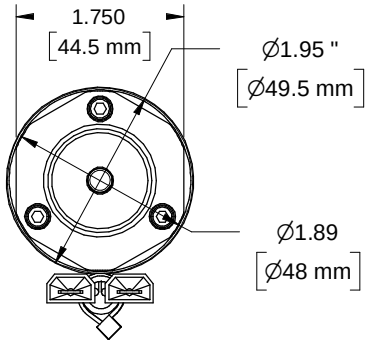

NOTES:

9480 - 12 12 VOLT SPECIFICATIONS
COIL DATA:
12V
3.6 OHMS ± 5%
NO POLARITY REQUIRED
LEAD WIRE:
19/32 STRANDED TINNED COPPER
UL STYLE 3239
200_C
TEFLON INSULATED

LEAD WIRES:
10.5 INCHES MIN.
BLACK IN COLOR
COVERED IN SPLIT LOOM
WIRE TIE AS SHOWN

MAXIMUM VOLTAGE REQUIRED TO OBTAIN FULL STROKE:
9.75V AT AMBIENTTEMPERATURE

9480 - 24 24 VOLT SPECIFICATIONS
COIL DATA:
24V
10.2 OHMS ± 5%
NO POLARITY REQUIRED
LEAD WIRE:
19/32 STRANDED TINNED COPPER
UL STYLE 3239
200˚C
TEFLON INSULATED

LEAD WIRES:
10.5 INCHES MIN.
WHITE IN COLOR
COVERED IN SPLIT LOOM
WIRE TIE AS SHOWN

MAXIMUM VOLTAGE REQUIRED TO OBTAIN FULL STROKE:
19.5V AT AMBIENTTEMPERATURE

STROKE:
.370 INCH ± 10%

AXIAL FORCE:
4.25 LBS. (± 30%) @ 0.01" DEFLECTION
8.75 LBS. (± 10%) @ 0.33" DEFLECTION

TERMINALS:
AMP P/N 2-520102-2 (OTHER TERMINALS POSSIBLE)
MATE TERMINALS:
P/N 2-520184-2 OR 3-350820-2
OTHER TERMINALS POSSIBLE

SERIAL NUMBER:
ETCHED INTO HOUSING OPPOSITE LEAD WIRES

PRODUCT LABEL:
PGLLC PART NUMBER (9480-12 OR 9480 - 24)
CUSTOMER PART NUMBER IF REQUIRED
DATE CODE

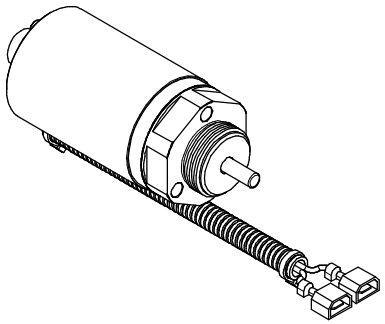

REV	DATE	DESCRIPTION	BY	APRVD	ECN #
A	05/04/2009	NEW RELEASE	GK	JS	789

REVISIONS

TOLERANCES (UNLESS OTHERWISE SPECIFIED)

.X	± .02	ALL DIMENSIONS IN INCHES	
.XX	± .01	THREAD TOL.	CLASS 2 - CHAMFER FIRST THREAD 45˚
.XXX	± .005		
.XXXX	± .0005	REMOVE ALL SHARP EDGES & BURRS	.010 MAX
◎	.0025 MAX		
⊥	.010 MAX	FINISH	64 (OR BETTER)
FRAC.	± 1/32	THIRD ANGLE PROJECTION	
DEG.	± 1/2˚ (30')		

Precision Governors, LLC
2322 Seventh Avenue, Rockford, IL 61104
phone 815.229.5300 • fax: 815.229.5342
www.precisiongovernors.com
ISO 9001 Certified

PART DESCRIPTION		
ACUTATOR, SZ MITZ. SL2		
SIZE	DRAWN BY	PART NUMBER
A	G.KUCZENSKI	9480
SCALE	DATE	MATERIAL SPECIFICATION
1:2	03/06/2009	-12 12 VOLT -24 24 VOLT